ITEM NO.	DESCRIPTION	REQ. D	MATERIAL	REFERENCE
1	FRAME ASSY.	1	SS400	
2	Drying Blower	1	HO-HSING	RB50-520
3	Drying Filter	1	SS400	
4	Honeycomb Rotor	1	Seibu Giken	MZC-250H30
5	Regeneration Blower	1	MATSUI	ST3-170
6	Regeneration Heater Box	1	SS400	3.7 KW

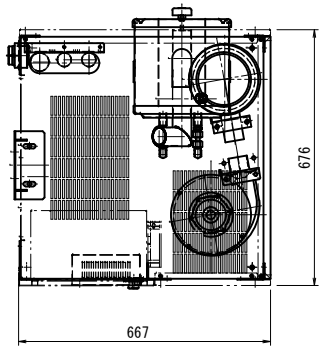

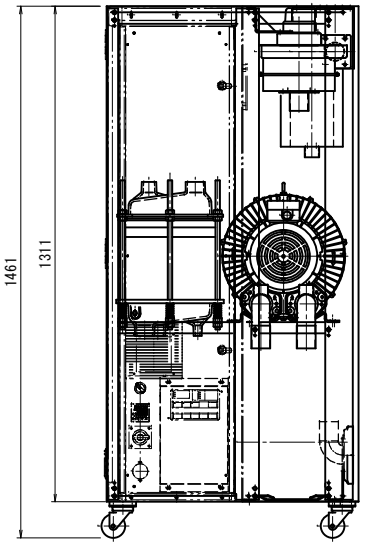

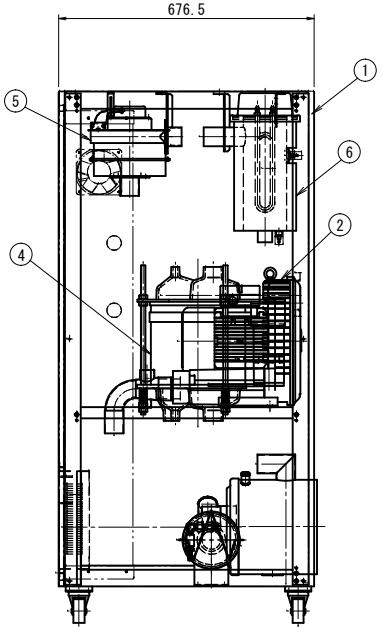

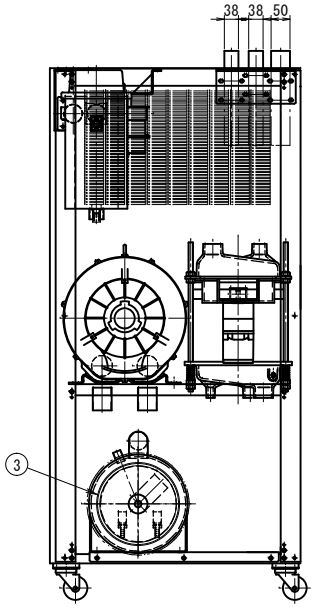

REVISION					
	△				
	△				
	△				
	△				
	MARK	DATE	CONTENTS	CHKD	APPD

NAME	INTERNAL G.A	FORM	DMZ2-80
APPROVED BY	MATSUMOTO	CODE NO.	
CHECKED BY	SANDEEP	DATE	26.02.2020
DRAWN BY	S.RAJPUT	UNIT mm	PLANE TRIGONOMETRY
SCALE	1/10	DWG. NO.	INA000960

MATSUI TECHNOLOGIES INDIA LIMITED